Centre No.						Paper Reference							Surname	Initial(s)
Candidate No.						6	6	7	7	/	0	1 R	Signature	

Paper Reference(s)

6677/01R

Edexcel GCE

Mechanics M1

Advanced/Advanced Subsidiary

Monday 13 May 2013 – Afternoon

Time: 1 hour 30 minutes

Examiner's use only

Team Leader's use only

Question Number	Leave Blank
1	
2	
3	
4	
5	
6	
7	
8	
Total	

Materials required for examination
Mathematical Formulae (Pink)

Items included with question papers
Nil

Candidates may use any calculator allowed by the regulations of the Joint Council for Qualifications. Calculators must not have the facility for symbolic algebra manipulation or symbolic differentiation/integration, or have retrievable mathematical formulae stored in them.

Instructions to Candidates

In the boxes above, write your centre number, candidate number, your surname, initials and signature.
Check that you have the correct question paper.
Answer ALL the questions.
You must write your answer to each question in the space following the question.
Whenever a numerical value of g is required, take $g = 9.8$ m s^{-2}.
When a calculator is used, the answer should be given to an appropriate degree of accuracy.

Information for Candidates

A booklet 'Mathematical Formulae and Statistical Tables' is provided.
Full marks may be obtained for answers to ALL questions.
The marks for individual questions and the parts of questions are shown in round brackets: e.g. **(2)**.
There are 8 questions in this question paper. The total mark for this paper is 75.
There are 32 pages in this question paper. Any blank pages are indicated.

Advice to Candidates

You must ensure that your answers to parts of questions are clearly labelled.
You should show sufficient working to make your methods clear to the Examiner.
Answers without working may not gain full credit.

This publication may be reproduced only in accordance with Pearson Education Ltd copyright policy.
©2013 Pearson Education Ltd.

Printer's Log. No.
P42958A
W850/R6677/57570 5/5/

P 4 2 9 5 8 A 0 1 3 2

Turn over

PEARSON

Leave blank

1. Two particles A and B, of mass 2 kg and 3 kg respectively, are moving towards each other in opposite directions along the same straight line on a smooth horizontal surface. The particles collide directly. Immediately before the collision the speed of A is 5 m s^{-1} and the speed of B is 6 m s^{-1}. The magnitude of the impulse exerted on B by A is 14 N s. Find

(a) the speed of A immediately after the collision,

(3)

(b) the speed of B immediately after the collision.

(3)

P 4 2 9 5 8 A 0 2 3 2

Leave blank

Question 1 continued

Q1

(Total 6 marks)

Leave blank

2.

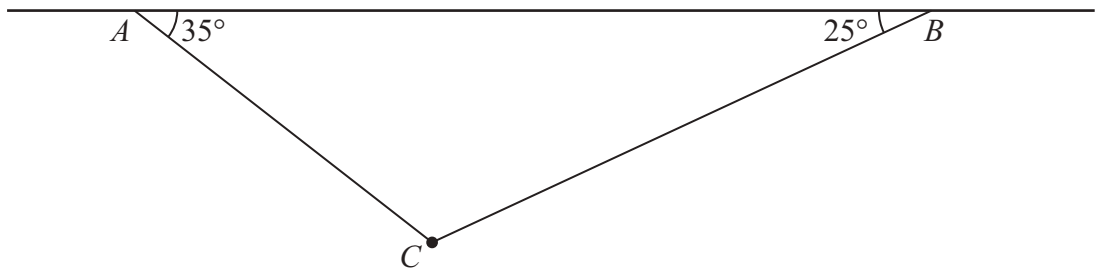

Figure 1

A particle of weight 8 N is attached at C to the ends of two light inextensible strings AC and BC. The other ends, A and B, are attached to a fixed horizontal ceiling. The particle hangs at rest in equilibrium, with the strings in a vertical plane. The string AC is inclined at 35° to the horizontal and the string BC is inclined at 25° to the horizontal, as shown in Figure 1. Find

(i) the tension in the string AC,

(ii) the tension in the string BC.

(8)

P 4 2 9 5 8 A 0 4 3 2

Leave blank

Question 2 continued

Leave blank

Question 2 continued

P 4 2 9 5 8 A 0 6 3 2

Leave blank

Question 2 continued

Q2

(Total 8 marks)

Leave blank

3.

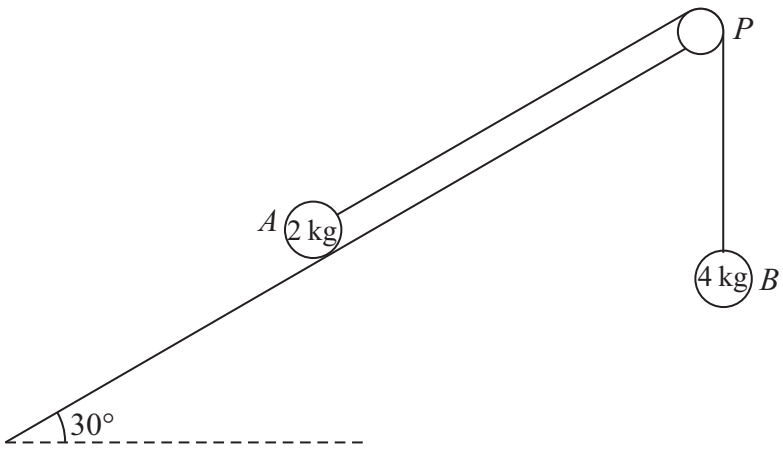

Figure 2

A fixed rough plane is inclined at 30° to the horizontal. A small smooth pulley P is fixed at the top of the plane. Two particles A and B, of mass 2 kg and 4 kg respectively, are attached to the ends of a light inextensible string which passes over the pulley P. The part of the string from A to P is parallel to a line of greatest slope of the plane and B hangs freely below P, as shown in Figure 2. The coefficient of friction between A and the plane is $\frac{1}{\sqrt{3}}$. Initially A is held at rest on the plane. The particles are released from rest with the string taut and A moves up the plane.

Find the tension in the string immediately after the particles are released.

(9)

P 4 2 9 5 8 A 0 8 3 2

Leave blank

Question 3 continued

Leave blank

Question 3 continued

P 4 2 9 5 8 A 0 1 0 3 2

Leave blank

Question 3 continued

Q3

(Total 9 marks)

Leave blank

4. At time $t = 0$, two balls A and B are projected vertically upwards. The ball A is projected vertically upwards with speed 2 m s^{-1} from a point 50 m above the horizontal ground. The ball B is projected vertically upwards from the ground with speed 20 m s^{-1}. At time $t = T$ seconds, the two balls are at the same vertical height, h metres, above the ground. The balls are modelled as particles moving freely under gravity. Find

(a) the value of T,

(5)

(b) the value of h.

(2)

P 4 2 9 5 8 A 0 1 2 3 2

Leave blank

Question 4 continued

Leave blank

Question 4 continued

Leave blank

Question 4 continued

Q4

(Total 7 marks)

Leave blank

5.

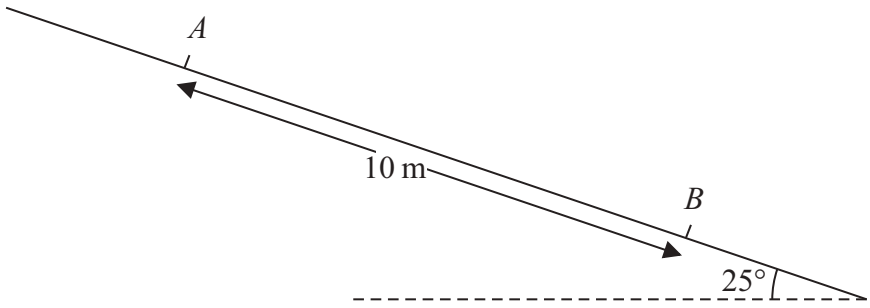

Figure 3

A particle P of mass 0.6 kg slides with constant acceleration down a line of greatest slope of a rough plane, which is inclined at 25° to the horizontal. The particle passes through two points A and B, where $AB = 10$ m, as shown in Figure 3. The speed of P at A is 2 m s^{-1}. The particle P takes 3.5 s to move from A to B. Find

(a) the speed of P at B,

(3)

(b) the acceleration of P,

(2)

(c) the coefficient of friction between P and the plane.

(5)

P 4 2 9 5 8 A 0 1 6 3 2

Leave blank

Question 5 continued

Leave blank

Question 5 continued

P 4 2 9 5 8 A 0 1 8 3 2

Leave blank

Question 5 continued

Q5

(Total 10 marks)

Leave blank

6. [*In this question* **i** *and* **j** *are horizontal unit vectors due east and due north respectively. Position vectors are given with respect to a fixed origin O.*]

A ship S is moving with constant velocity $(3\mathbf{i} + 3\mathbf{j})$ km h^{-1}. At time $t = 0$, the position vector of S is $(-4\mathbf{i} + 2\mathbf{j})$ km.

(a) Find the position vector of S at time t hours.

(2)

A ship T is moving with constant velocity $(-2\mathbf{i} + n\mathbf{j})$ km h^{-1}. At time $t = 0$, the position vector of T is $(6\mathbf{i} + \mathbf{j})$ km. The two ships meet at the point P.

(b) Find the value of n.

(5)

(c) Find the distance OP.

(4)

P 4 2 9 5 8 A 0 2 0 3 2

Leave blank

Question 6 continued

Leave blank

Question 6 continued

Leave blank

Question 6 continued

Q6

(Total 11 marks)

Leave blank

7.

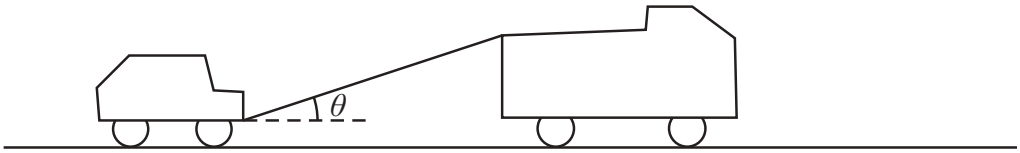

Figure 4

A truck of mass 1750 kg is towing a car of mass 750 kg along a straight horizontal road. The two vehicles are joined by a light towbar which is inclined at an angle θ to the road, as shown in Figure 4. The vehicles are travelling at 20 m s^{-1} as they enter a zone where the speed limit is 14 m s^{-1}. The truck's brakes are applied to give a constant braking force on the truck. The distance travelled between the instant when the brakes are applied and the instant when the speed of each vehicle is 14 m s^{-1} is 100 m.

(a) Find the deceleration of the truck and the car.

(3)

The constant braking force on the truck has magnitude R newtons. The truck and the car also experience constant resistances to motion of 500 N and 300 N respectively. Given that $\cos\theta = 0.9$, find

(b) the force in the towbar,

(4)

(c) the value of R.

(4)

P 4 2 9 5 8 A 0 2 4 3 2

Leave blank

Question 7 continued

Leave blank

Question 7 continued

Leave blank

Question 7 continued

Q7

(Total 11 marks)

Leave blank

8.

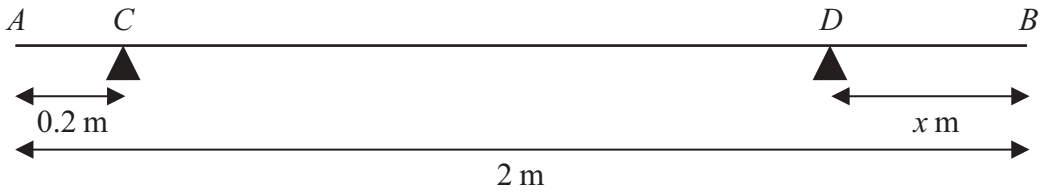

Figure 5

A uniform rod AB has length 2 m and mass 50 kg. The rod is in equilibrium in a horizontal position, resting on two smooth supports at C and D, where $AC = 0.2$ metres and $DB = x$ metres, as shown in Figure 5. Given that the magnitude of the reaction on the rod at D is twice the magnitude of the reaction on the rod at C,

(a) find the value of x.

(6)

The support at D is now moved to the point E on the rod, where $EB = 0.4$ metres. A particle of mass m kg is placed on the rod at B, and the rod remains in equilibrium in a horizontal position. Given that the magnitude of the reaction on the rod at E is four times the magnitude of the reaction on the rod at C,

(b) find the value of m.

(7)

P 4 2 9 5 8 A 0 2 8 3 2

Leave blank

Question 8 continued

Leave blank

Question 8 continued

P 4 2 9 5 8 A 0 3 0 3 2

Leave blank

Question 8 continued

Leave blank

Question 8 continued

Q8

(Total 13 marks)

TOTAL FOR PAPER: 75 MARKS

END

P 4 2 9 5 8 A 0 3 2 3 2